KOBOLD NE CONDUCTIVE LEVEL SWITCH

User Instructions

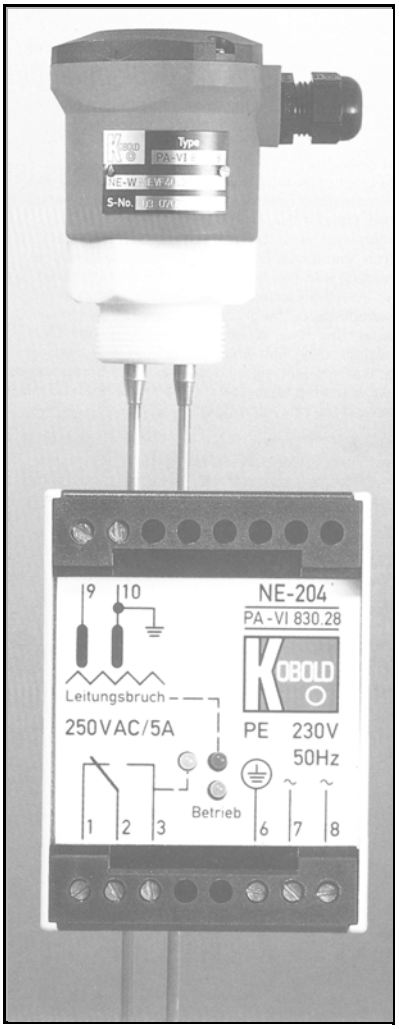

Order from: **C A Briggs Company**
622 Mary Street; Suite 101; Warminster, PA 18974
Phone: 267-673-8117 - Fax: 267-673-8118
Sales@cabriggs.com - www.cabriggs.com

Kobold Instruments Inc. • 1801 Parkway View Drive • Pittsburgh PA 15205

Phone 1-800-998-1020 • Fax (412) 788-4890

Manual-NE_11-99

Table of Contents

1.0 General 1
2.0 Specifications 2
3.0 Installation Instructions 4
4.0 Operation 12
5.0 Arrival of Damaged Equipment. 12
6.0 Maintenance 12
7.0 Need help with your NE Level Switch?. 12

List of Diagrams

3.2.1 NE-104X and NE-304X Electrode Relays. 4
3.2.2 Wiring Diagram for Automatic Container Fill function. 7
3.2.3 Wiring Diagram for Automatic Container Pump-Down Function . . . 8
3.2.4 Wiring Diagram for High Level Protection. 9
3.2.5 Wiring Diagram for Low Level Protection. 10
3.2.6 Wiring Diagram for the NE-304 Pump-Up and High Level Power Shut Off 11

List of Tables

2.1 Technical Data 2
2.2 Model Numbers, Material Combinations and Operating Limits 3

KOBOLD NE CONDUCTIVE LEVEL SWITCH

User Instructions

CAUTION: For safety reasons, please read the cautionary information located at the end of the manual, before attempting installation.

1.0 General

The Kobold Model NE level switch is intended for use in monitoring and control applications involving conductive liquids which may be contaminated with dirt or solids. The model NE level switch combined with the model NE-104 or NE-304 electrode relay, provides both a level monitoring function and pump-up, pump-down function. The model NE level switch can be provided with up to six electrodes. One electrode is used as a reference electrode while the other five are used as switch points. If the container being monitored is constructed of conductive materials the container itself may be used as the reference electrode, thereby providing a maximum of six possible switchpoints.

The device operates as follows:

1. The electrode relay provides a 24 VAC excitation voltage to the level switch electrode probes.
2. When the liquid level reaches the tip one of the setpoint probes an electrically conductive path is formed between the reference and setpoint probes.
3. The resulting current flow is sensed by the electrode relay and the SPDT contact is switched to provide a control function.
4. Result: A level monitoring instrument with multiple setpoints.

The model NE level switch is available with either rigid metal electrodes or electrodes which are suspended by cables. Except for the electrode tips, each electrode is fully clad with a non-conductive material. This material protects the instrument from false alarms resulting from debris which may become lodged between the electrodes.

2.0 Specifications

Table 2.1: Technical Data

NE Level Switch:

Operating Principle:	Electrical Conduction

NE-104/NE-304 Electrode relay;

Number of Channels:	
NE-104:	Single Channel
NE-304:	Dual Channel
Power Supply:	230 VAC
(as specified)	110 VAC
	24 VAC
	±10%
Minimum Sensitivity:	50K Ohm
	20µS/cm
Electrode Excitation Voltage:	24 VAC Max.
Electrode Current:	4 mA max
Response Time:	0.5 seconds
Ambient Operating Temp:	32 to158°F
Output:	SPDT Relay
	Max. 250 VAC
	@ 5A
Enclosure:	PPO- Polyvinyloxide
	NEMA 1
	Rail Mountable DIN 46121 Rail

Table 2.2: Model Numbers, Material Combinations and Operating Limits

Rigid Electrodes

Model NE...	... L, K	-1-6...	... E, H, T...	...A, V...	...P, E, F
	Connector Housing	Number of Electrodes	Electrode Material	Electrode Cladding	Fitting Material
	L=Aluminum 1.38”x2.00”x1.97” K=Polycarbonate 3.0”x3.0”x3.0”	1 2 3 4 5 6	E=SS H=Hastelloy® T=Titanium	A=Polyole-fin V=PTFE	P=Polyprop. E=SS F=PTFE

Max. Pressure:		**Max. Temperature:**	
Polypropylene Fittings	230 PSIG	Polyolefin Cladding	190°F
PTFE Fittings	90 PSIG	PTFE Cladding	300°F
SS Fittings	440 PSIG	(w. PP Fittings)	190°F

Suspended Electrodes

Model NEH	-1-6...	... E, H, T...	...N, V...	...P, E, F	
	Number of Electrodes	Electrode Material	Cable Clad-ding/ Diame-ter	Fitting Material	Connector Housing
	1 2 3 4 5 6	E=SS H=Hastel-loy® T=Titanium	N= Neoprene/ 0.23” V=PTFE/0.08”	P=Polyprop. F=PTFE	Suffix “L” Aluminum Housing 1.38”x2.00”x1.97” Suffix “K” Polycarbonate Housing 3.0”x3.0”x3.0”

Max. Pressure:	90 PSIG	**Max. Temperature:**	
		Neoprene Cable:	140°F
		PTFE Cable:	300°F

3.0 Installation Instructions

CAUTION: For safety reasons, please read the cautionary information located at the end of the manual, before attempting installation.

3.1 Mechanical Installation

To install, proceed as follows:

1. Confirm that the temperature and pressure for your application are within the specification of the unit.
2. If your unit does not have pre-cut electrodes, they may be cut to the appropriate length in the field using a hacksaw or power metal cutting saw. The electrodes should be cut such that the numbering on the wires which connect the electrodes to the terminal strip inside the housing run in ascending order from the shortest to the longest probe. This will prevent confusion as to how the probes are connected during future maintenance and troubleshooting activities.
3. Thread the level switch housing into its opening at the top of the tank with the electrodes extending into the tank. The unit is now ready to connect to the electrode control relay.

3.2 Electrical Wiring

Diagram 3.2.1 NE-104X and NE-304X Electrode Relays

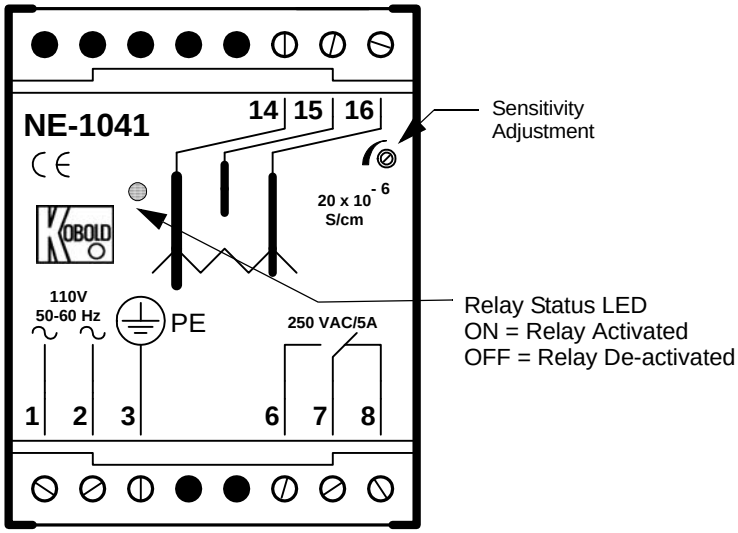

NE-104X Single Channel Electrode Relay

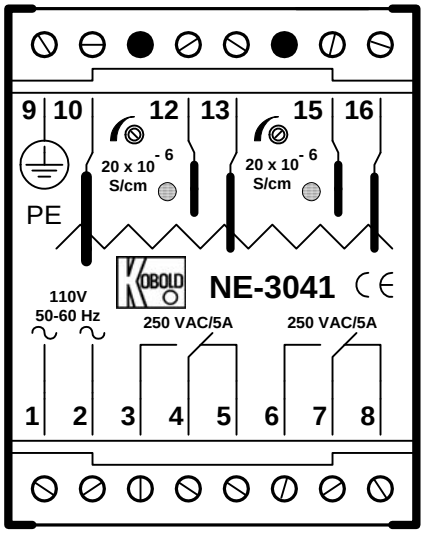

NE-304X Dual Channel Electrode Relay

Contains two relay channels with independent sensitivity adjustments and common reference electrode connection (Pin 10)

The diagram on the front of the NE-104 electrode relay shows the output relay at pins 6, 7, and 8 in its alarm (probes wet) state. In this condition, switch continuity exists between common (pin 7) and pin 8. In an effort to make the output relay fail-safe, a loss of power to the electrode relay will also cause the relay to switch to this position. Thus with electrical power applied to the electrode relay, the normally open output relay position (with probes dry) is between common and pin 8, and the normally closed position is between common and pin 6. The two relay channels on the NE-304 series function in the same manner except that the pin numbers are different.

To electrically connect the unit, proceed as follows:

1. Remove the lid from the electrode level switch housing to expose the terminal strip. If the electrodes were factory cut, or field cut per our instructions in section 3.1 above, the wires leading from the electrodes to the terminal strip are numbered in ascending order from the shortest to the longest probe.
2. Connect the level switch probes to the electrode relay(s) according to diagrams 3.2.2 through 3.2.5 depending on which function is desired. Although these diagrams are based on the single channel NE-104 electrode relay pin-outs, they can also be used as guidance for wiring the dual channel NE-304 except that the pin numbers will change.
3. One electrode relay channel is required for each function (i.e., alarm or pump-up/ pump-down).
4. Connect the power supply and safety ground to pins 1, 2, and 3 respectively.
5. Apply power to the electrode relay. The unit is operable as soon as power is applied.
6. Please note that the NE-304 is a dual channel relay with a common reference electrode connection for both channels (pin 10). Diagram 3.2.6 shows an example of wiring the NE-304 to achieve a pump control and alarm.

3.3 Sensitivity Adjustment

The NE Series electrode relays can sense fluids with a conductivity of 20 μS/cm or higher. The electrode relay sensitivity is factory set such that water, and other highly conductive liquids will be sensed and no field adjustment is required. Adjustment of the electrode relay sensitivity may be necessary in order to ensure that the presence of lower conductivity fluids will be properly sensed by the level switch probes. If the relay does not activate (LED extinguished) when all electrodes are immersed in fluid, sensitivity adjustment is needed. Turning the sensitivity potentiometer clockwise increases the relay sensitivity allowing it to detect less conductive liquids. To adjust the electrode relay sensitivity, proceed as follows:

1. Ensure that the electrodes are immersed in the fluid to be monitored.
2. Apply power to the electrode relay.
3. Turn the sensitivity potentiometer slowly clockwise until the relay picks up and the status LED is extinguished.
4. Turn the sensitivity potentiometer an additional turn clockwise (approximately).

Diagram 3.2.2 Wiring Diagram for Automatic Container Fill Function

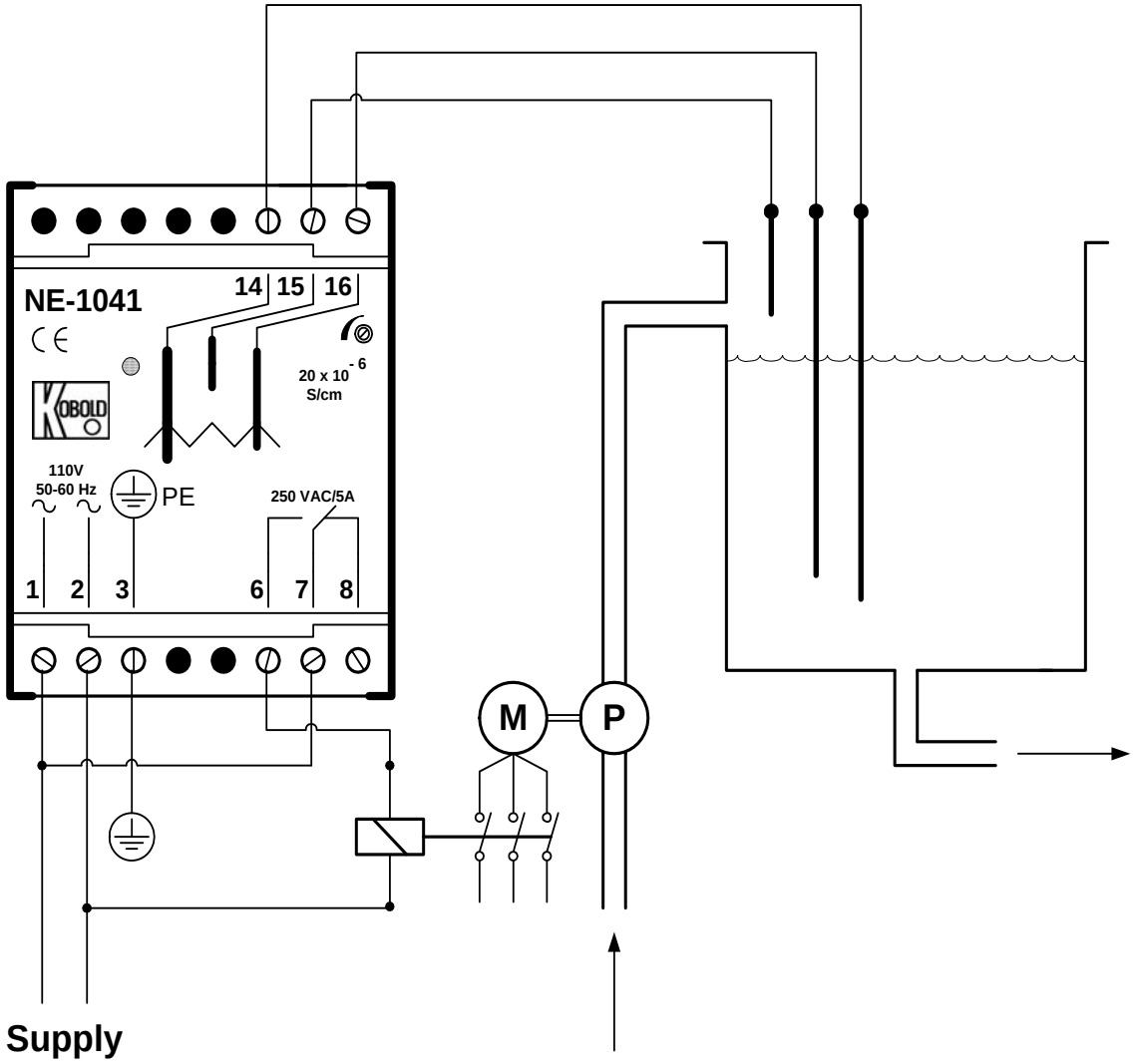

Diagram 3.2.3 Wiring Diagram for Automatic Container Pump-Down Function

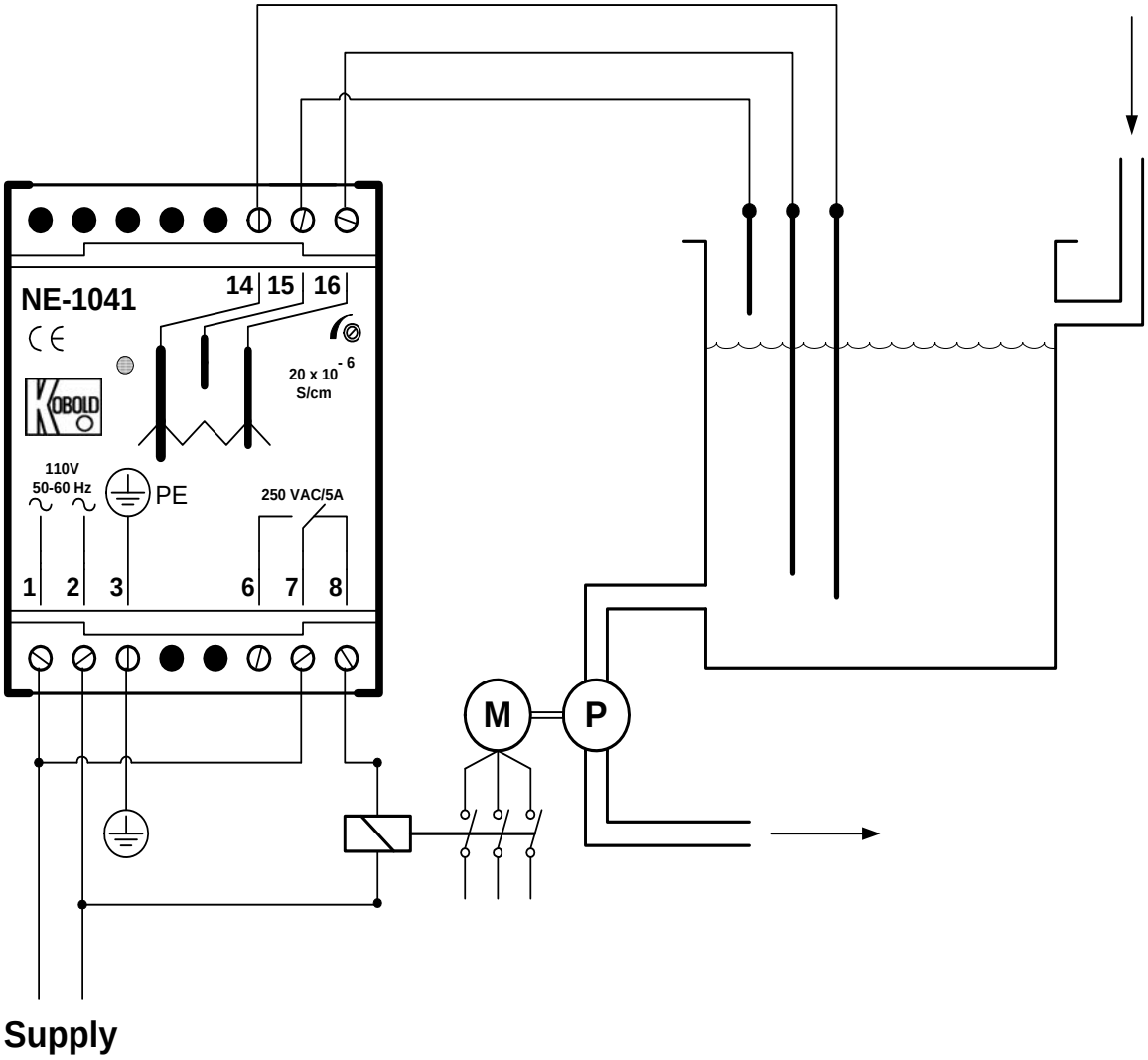

Diagram 3.2.4 Wiring Diagram for High Level Protection

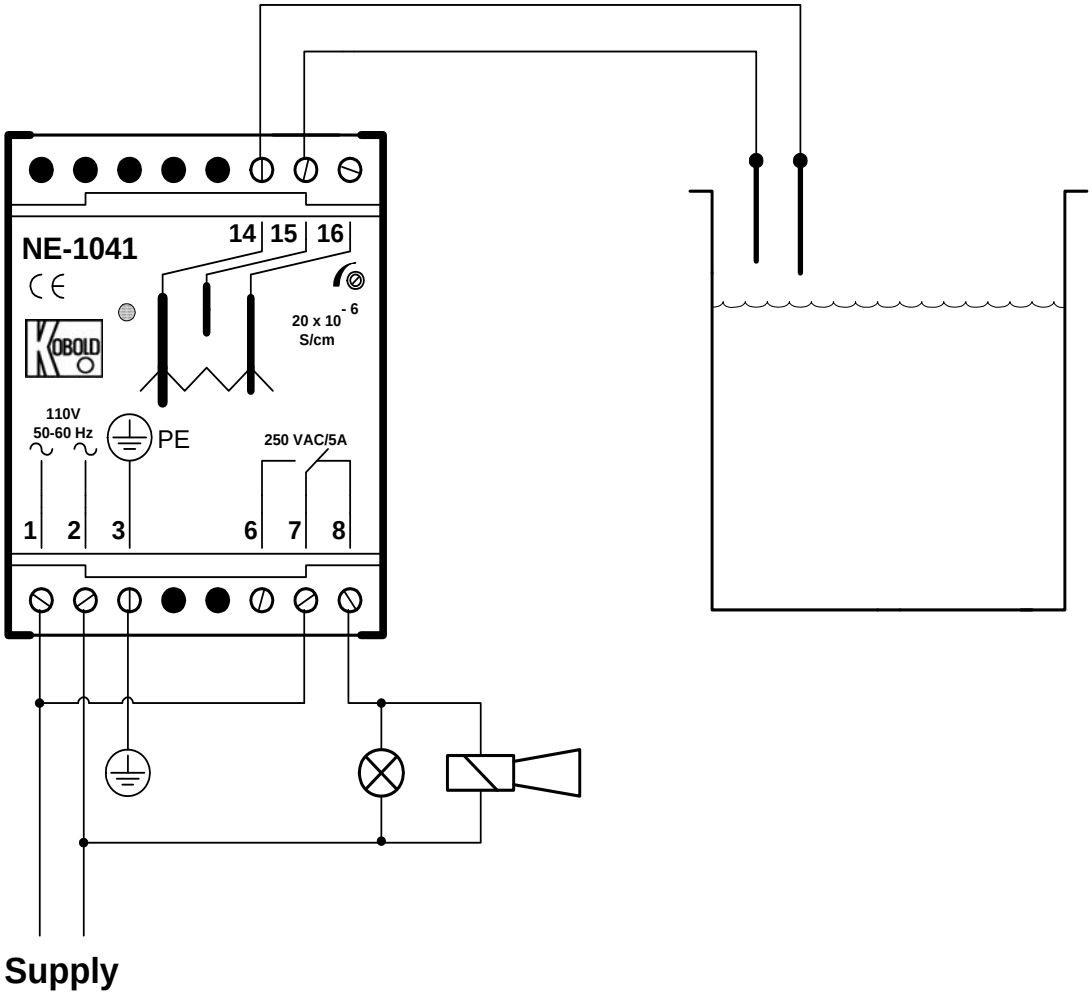

Diagram 3.2.5 Wiring Diagram for Low Level Protection

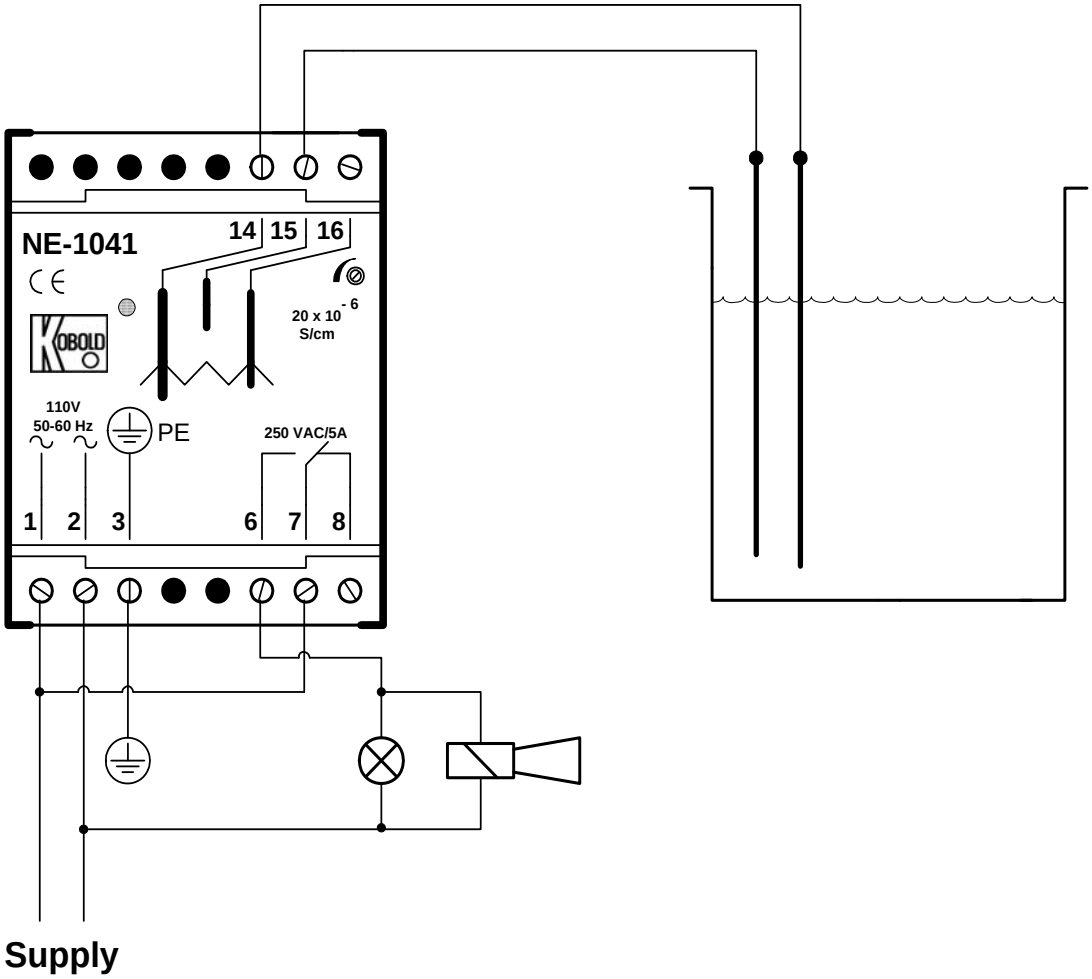

Diagram 3.2.6 Wiring Diagram for the NE-304 Pump-up and High Level Power Shut Off

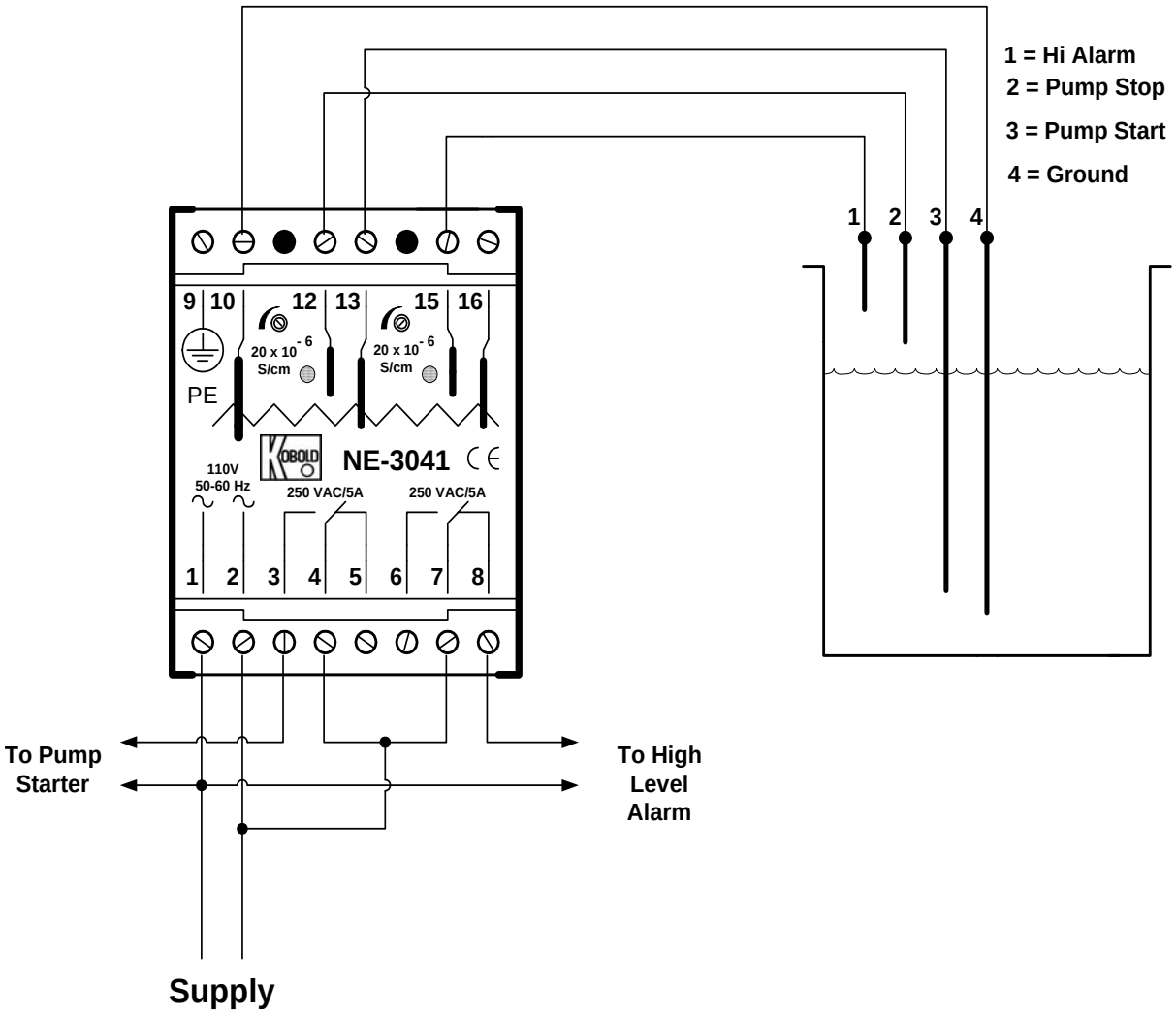

4.0 Operation

The flow switch is operational as soon as it is wired into a power supply and the sensitivity is adjusted. The unit requires no further adjustments after the initial sensitivity adjustment; however, if the type of fluid media being monitored changes (i.e., from a highly conductive fluid to one of lower conductivity) the sensitivity of the electrode relay may require readjustment.

5.0 Arrival of Damaged Equipment

Your instrument was inspected prior to shipment and found to be defect-free. If damage is visible on the unit, we advise that you carefully inspect the packing in which it was delivered. If damage is visible, notify your local carrier at once, since the carrier is liable for replacement under these circumstances. If your claim is refused, please contact KOBOLD instruments for further advisement.

6.0 Maintenance

The KOBOLD NE level switch and electrode relay require little maintenance provided the unit is operated within its specified limits. The non-conductive electrode cladding protect against malfunctions due to buildup on the electrode probes. A periodic inspection of all wiring terminations for evidence of corrosion or loose connections is recommended to keep your level switch in peak operating condition.

Do not tamper with the internal electronics as this voids your warranty

7.0 Need help with your NE Level Switch?

Call one of our friendly engineers at 412-788-2830.

CAUTION

PLEASE READ THE FOLLOWING WARNINGS BEFORE ATTEMPTING INSTALLATION OF YOUR NEW DEVICE. FAILURE TO HEED THE INFORMATION HEREIN MAY RESULT IN EQUIPMENT FAILURE AND POSSIBLE SUBSEQUENT PERSONAL INJURY.

- **User's Responsibility for Safety:** KOBOLD manufactures a wide range of process sensors and technologies. While each of these technologies are designed to operate in a wide variety of applications, it is the user's responsibility to select a technology that is appropriate for the application, to install it properly, to perform tests of the installed system, and to maintain all components. The failure to do so could result in property damage or serious injury.
- **Proper Installation and Handling:** Use a proper sealant with all installations. Never overtighten the housing within the fitting. Always check for leaks prior to system start-up.
- **Wiring and Electrical:** Depending on the model supply voltage of 24 VAC, 120 VAC or 230 VAC is used to power the NE electrode relay. The required input voltage is marked on the electrode relay faceplate. Ensure that the proper voltage is available prior to installation. The electrode relay supplies power to the level sensing probes, therefore no additional power is require at the tank. Electrical wiring of the sensor should be performed in accordance with all applicable national, state, and local codes.
- **Temperature and Pressure:** The maximum operating pressure and temperature for the various models and material combinations are provided in Table 2.2 gives pressure/temperature limits for the various material combinations. Operation outside these limitations will cause damage to the unit.
- **Material Compatibility:** Table 2.2 gives the material combinations for various probe types. Make sure that the model which you have selected is chemically compatible with the application liquids. While the level sesning probe housing is liquid resistant when installed properly, it is not designed to be immersed. It should be mounted in such a way that it does not normally become submerged in fluid.
- **Flammable, Explosive and Hazardous Applications:** The NE conductive level switch is not an explosion-proof or intrinsically safe design. It should not be used in applications where an explosion-proof design is required.
- **Make a Fail-Safe System:** Design a fail-safe system that accommodates the possibility of probe or power failure. In critical applications, KOBOLD recommends the use of redundant backup systems and alarms in addition to the primary system.